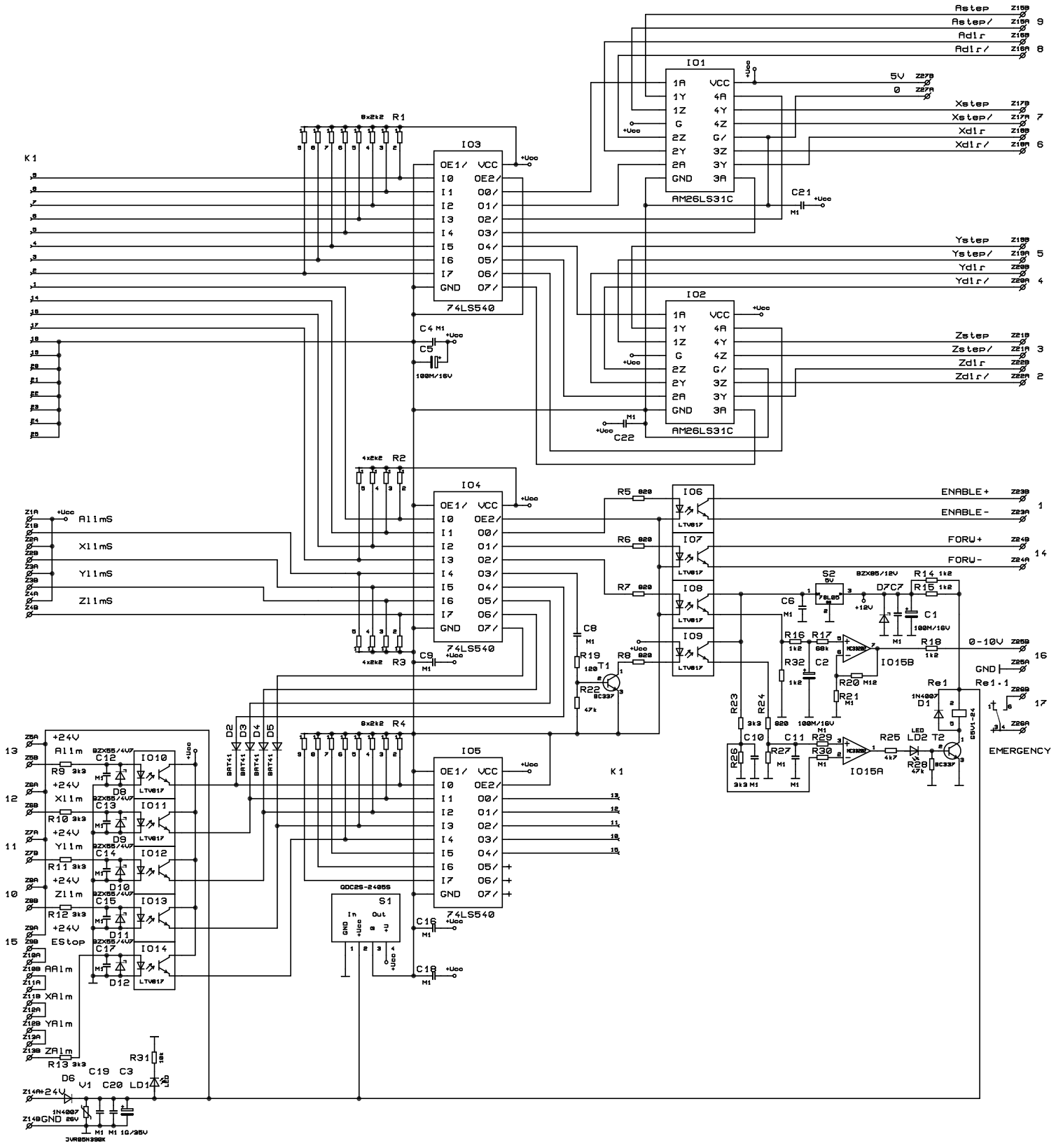
Astep
Astep/
Adlr
Adlr/
IO1
AM26LS31C
5V
Xstep
Xstep/
Xdlr
Xdlr/
R1
8x2k2
IO3
74LS540
K1
C21
Ystep
Ystep/
Ydlr
Ydlr/
IO2
AM26LS31C
C4
C5
100M/16V
Zstep
Zstep/
Zdlr
Zdlr/
C22
R2
4x2k2
IO4
74LS540
A11mS
X11mS
Y11mS
Z11mS
R3
C9
R5 820
R6 820
R7 820
IO6
IO7
IO8
IO9
LTV817
ENABLE+
ENABLE-
FORW+
FORW-
S2
78L05
BZX85/12V
D7
C7
R14 1k2
R15 1k2
C6
C1
100M/16V
R16 1k2
R17 68k
R18 1k2
0-10V
IO15B
R32 1k2
C2
R20 M12
R21
GND
Re1
Re1.1
D1
1N4007
EMERGENCY
C8
R19 120
T1
R22 BC337
47k
R8 820
R23 3k3
R24 820
C10
C11
R29
R30
R25 4k7
LD2
T2
R26 3k3
R27
R28 47k
BC337
IO15A
D2
D3
D4
D5
BAT41
R4
8x2k2
IO5
74LS540
QDC25-2405S
S1
In
Out
C16
C18
+24V
A11m
R9 3k3
C12
BZX85/4V7
D8
IO10
X11m
R10 3k3
C13
D9
IO11
Y11m
R11 3k3
C14
D10
IO12
Z11m
R12 3k3
C15
D11
IO13
EStop
C17
D12
IO14
AA1m
XA1m
YA1m
ZA1m
R13 3k3
R31 10k
C19
C3
D6
V1
C20
LD1
1N4007
GND
JVR05N350K