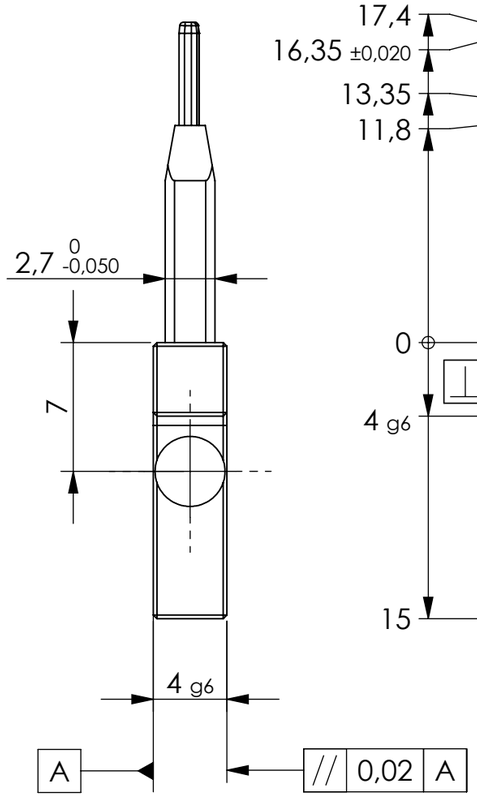

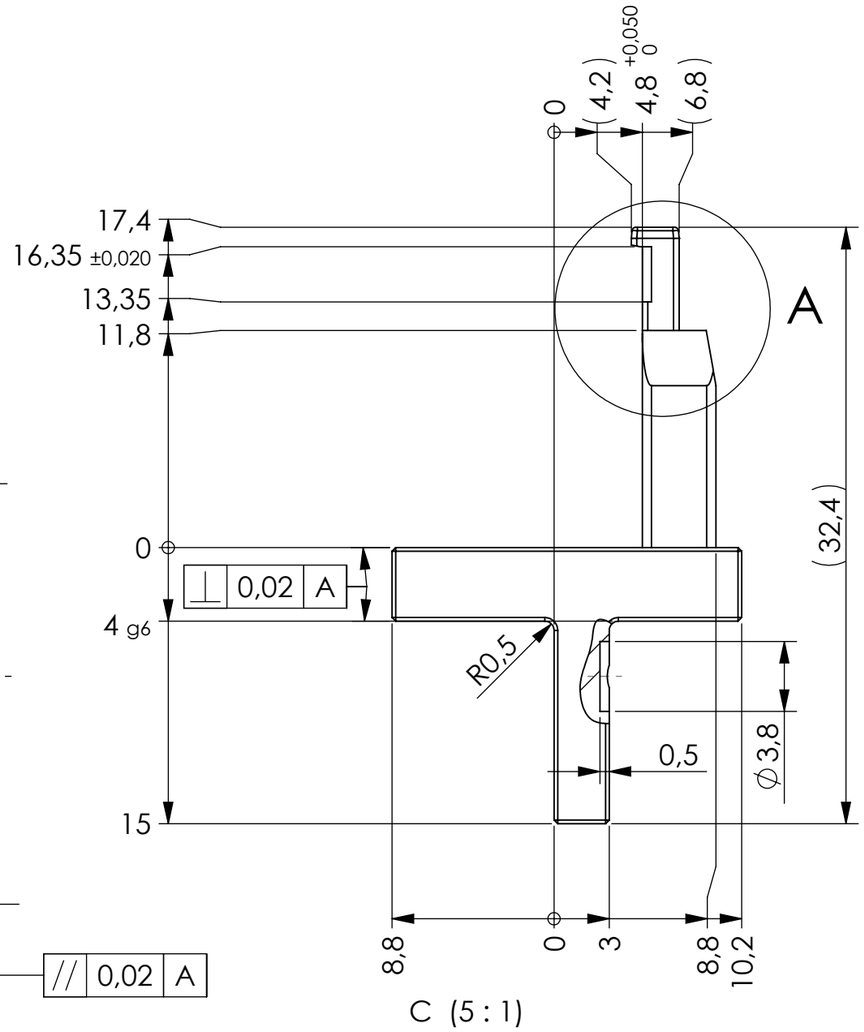

C (5 : 1)

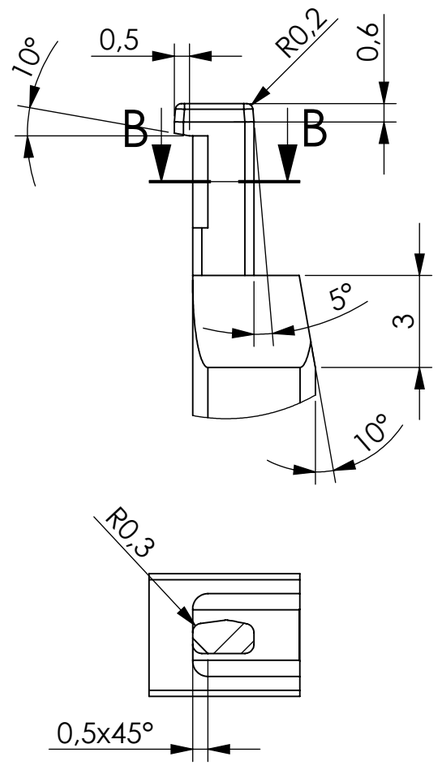

A (5 : 1)

B-B (5 : 1)

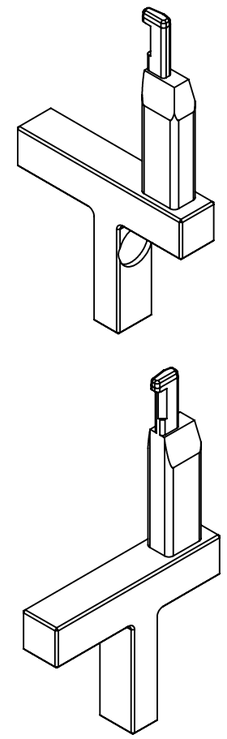

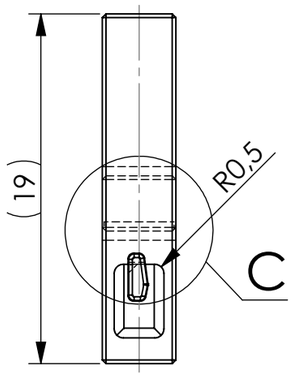

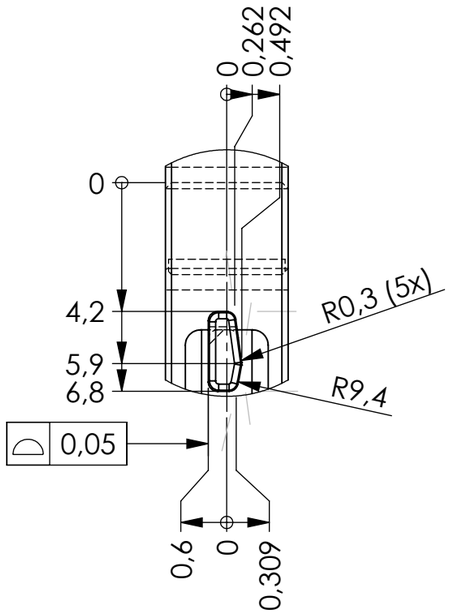

nicht bemasste Fasen 0,2x45°

N6

notes for tolerances	
all distances between holes without tolerances	
fits	: ± 0,02 mm
threads	: ± 0,1mm
holes	: ± 0,2 mm
countersunks	: ± 0,2mm

Rights reserved ISO 16016
The reproduction, distribution and utilization of this document as well as the communication of its contents to others without express authorization is prohibited. Offenders will be held liable for the payment of damages. All rights reserved in the event of the grant of patent, utility model or design.

Material 1.4305 X 10 CrNiS 18 9	Surface treatment	Heat treatment plasma-nitride	Weight in kg 0,003
Drawn by BehC — Date 13.08.2013 Released BehC — Date 28.03.2014	ATS Automation Tooling Systems GmbH Marsstrasse 2, 85551 Heimstetten		
General Tolerances ISO 2768-mK - Drawing not to scale - Dimensions are in mm	GRIPPER JAW 2 HANGING		
Unless otherwise specified - Dimensions apply after finish - Edges DIN ISO 13715 - All machined surfaces Ra 3.2	Drawing number MU1000083435		Revision 01
+0,2 -0,2	Structure number -	Scale 3:1 (,)	Sheet 1 of 1