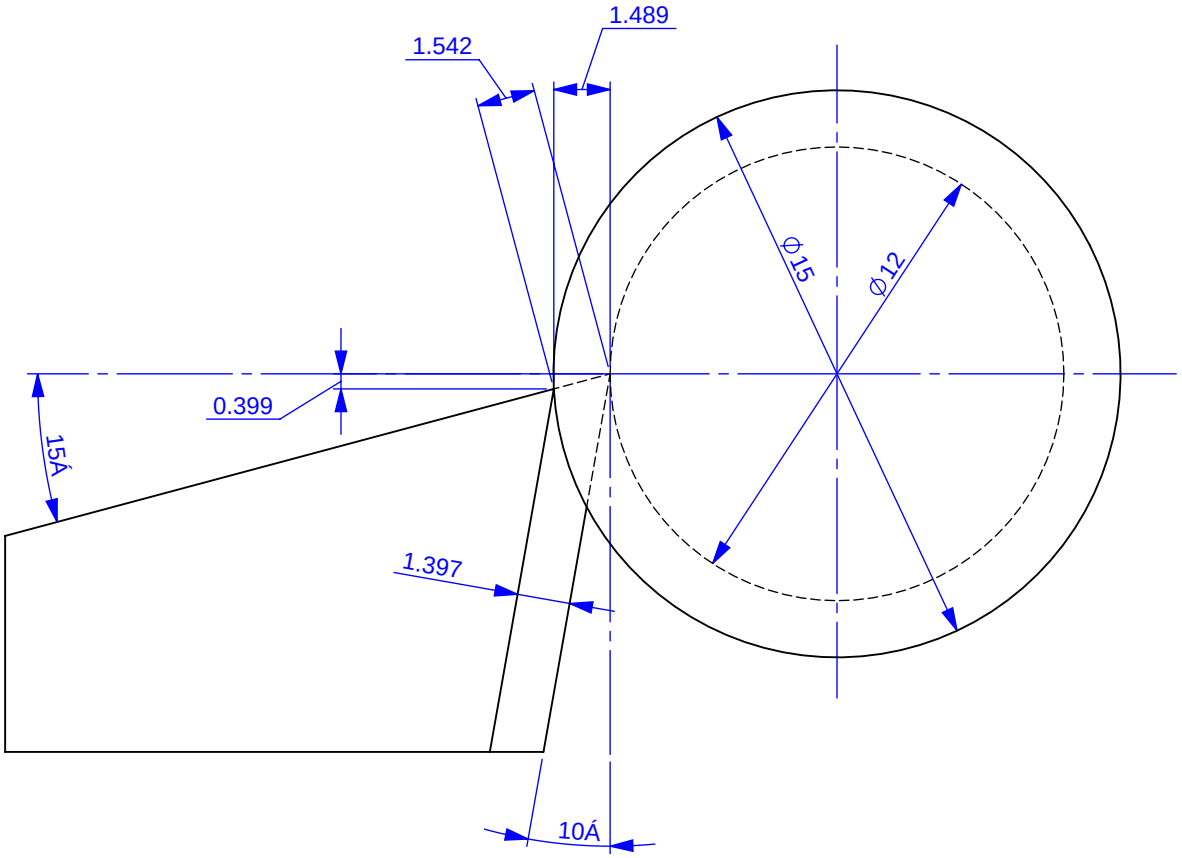
1.489
1.542
Φ15
Φ12
0.399
15Á
1.397
10Á