RevNo	Revision note	Date	Signature	Checked

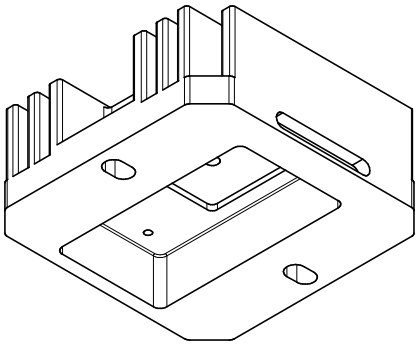

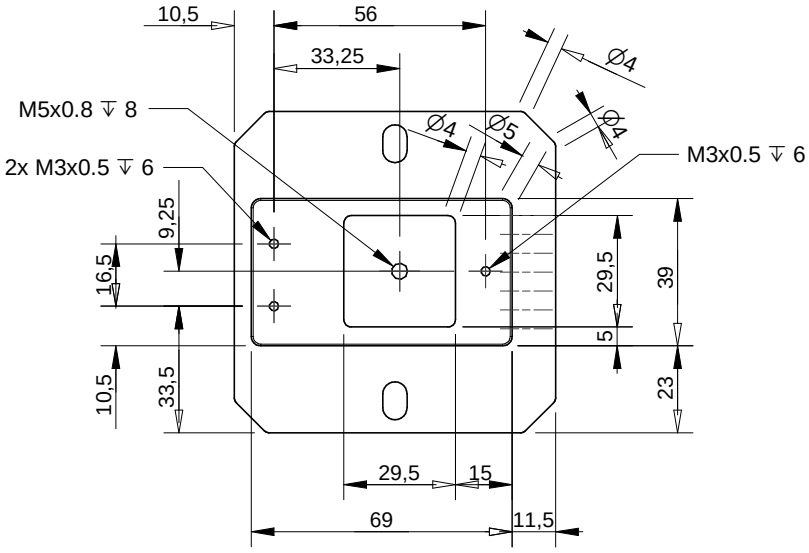

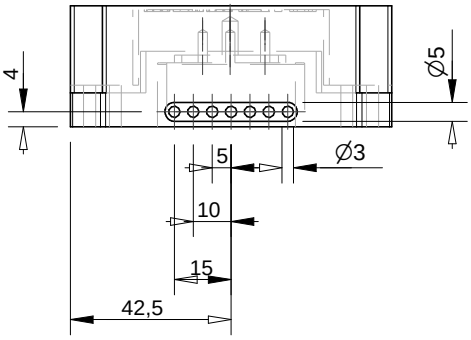

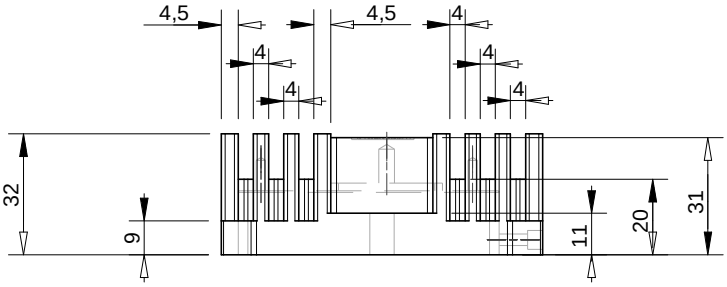

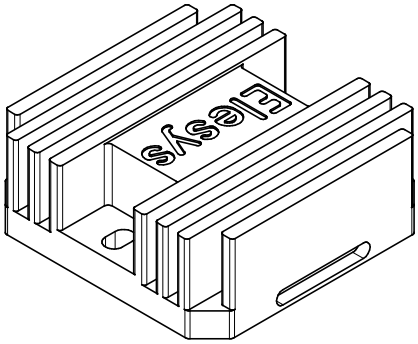

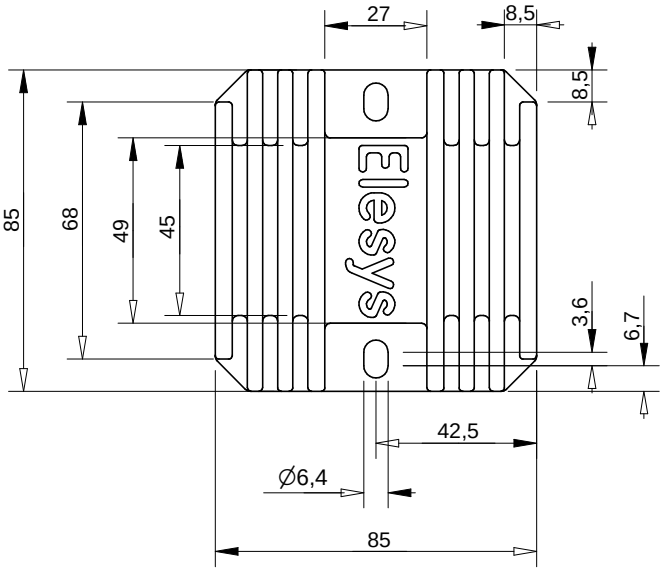

	Edition	Sheet