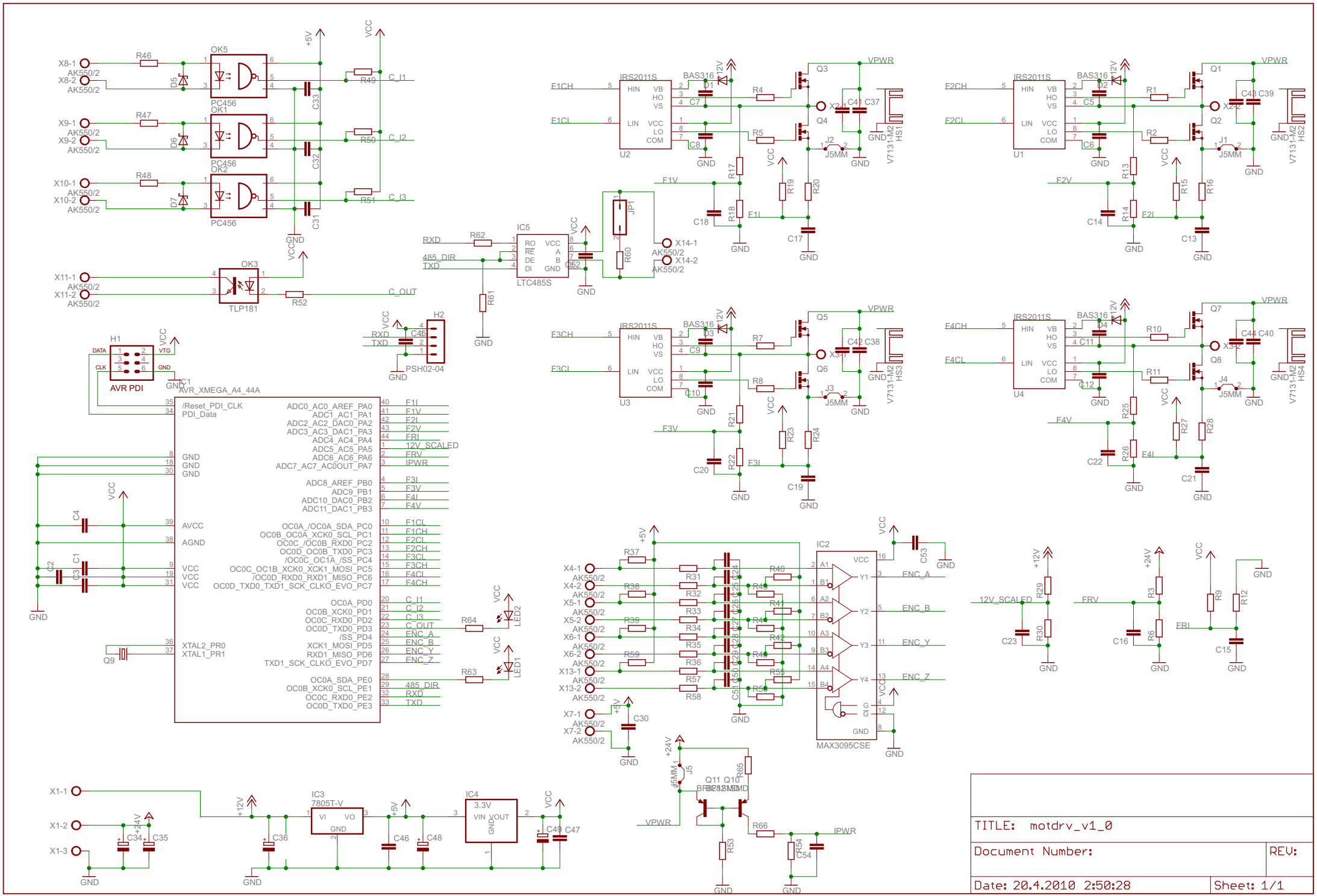

20.4.2010 3:03:43 f=0.74 C:\prace\hw\eagle\projects\motdrv_v1\motdrv_v1_0.sch (Sheet: 1/1)